SECTION STC
STEERING CONTROL SYSTEM

CONTENTS

EPS

ELECTRICALLY CONTROLLED POWER STEERING SYSTEM 2
Precautions 2
BEFORE DIAGNOSING THE POWER STEERING SYSTEM, ENSURE THAT 2
Description 2
SYSTEM DESCRIPTION 2
FAIL-SAFE FUNCTION 2
HYDRAULIC CIRCUIT 3
Component Parts Location 3
Wiring Diagram 4
Control Unit Input/Output Signal Standard 6
Trouble Diagnosis 7
PRECAUTIONS FOR DIAGNOSIS 7
INSPECTION BEFORE TROUBLE DIAGNOSIS 7
DIAGNOSIS PROCEDURE 7

TILT/TELESCOPIC

TILT & TELESCOPIC SYSTEM 11
System Description 11
OPERATION 11
Component Parts and Harness Connector Location 11
Wiring Diagram 12
BCM Input/Output Signal Standard 13
Preliminary Check 14
POWER SUPPLY AND GROUND CIRCUIT INSPECTION 14
Symptom 1: Telescopic System Does Not Operate 15
Symptom 2: Tilt System Does Not Operate 18

ELECTRICALLY CONTROLLED POWER STEERING SYSTEM

PFP:28500

Precautions

AGS0003E

BEFORE DIAGNOSING THE POWER STEERING SYSTEM, ENSURE THAT

Vehicle Stopped

1. Power steering components (gears, oil pump, pipes, etc.) are free from leakage, and that oil level is correct.
2. Tires are inflated to specified pressure and are of specified size, and that steering wheel is a genuine Nissan part.
3. Suspension utilizes the original design, and is free of modifications which increase vehicle weight.
4. Wheel alignment is adjusted properly.

Vehicle in Operation

1. Understand the symptom.
2. Engine is operation properly

Description

AGS0003F

SYSTEM DESCRIPTION

The power steering system is a twin orifice type, which uses a vehicle-speed sensing, electronic control design. Solenoid valve sensitivity is controlled in response to vehicle speed to achieve optimum steering effort.

FAIL-SAFE FUNCTION

The fail-safe function operates to regulate solenoid valve operation in response to engine speed, thereby maintaining the required steering force.

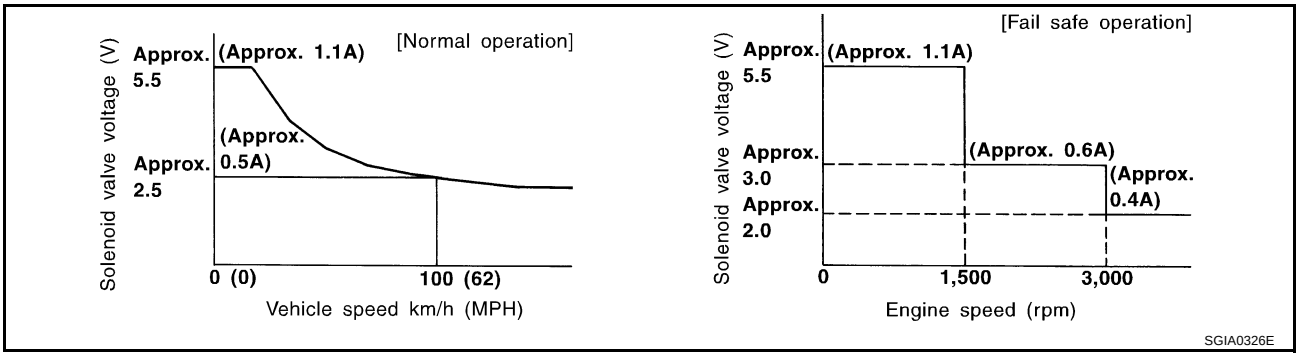

Fail-Safe Input Conditions

Fail-safe input conditions	Release conditions
No vehicle speed signal entered for at least 10 seconds while driving at an engine speed of greater than 1,500 rpm.	● A vehicle speed signal of greater than 1.4 km/h (0.9 MPH) is entered ● Ignition switch is turned from ″OFF″ to ″ON″.
A vehicle speed signal of greater than 30 km/h (19 MPH) or abruptly drops below 2 km/h (1 MPH).	

NOTE:
When the engine is revved up to 1,500 rpm or more for at least 10 seconds with vehicle at standstill, the fail-safe function operates; however, this is not a matter of concern. The fail-safe function can be released by driving vehicle of a speed of greater than 1.4 km/h (0.9 MPH) or by turning ignition switch from “OFF” to “ON”.

HYDRAULIC CIRCUIT

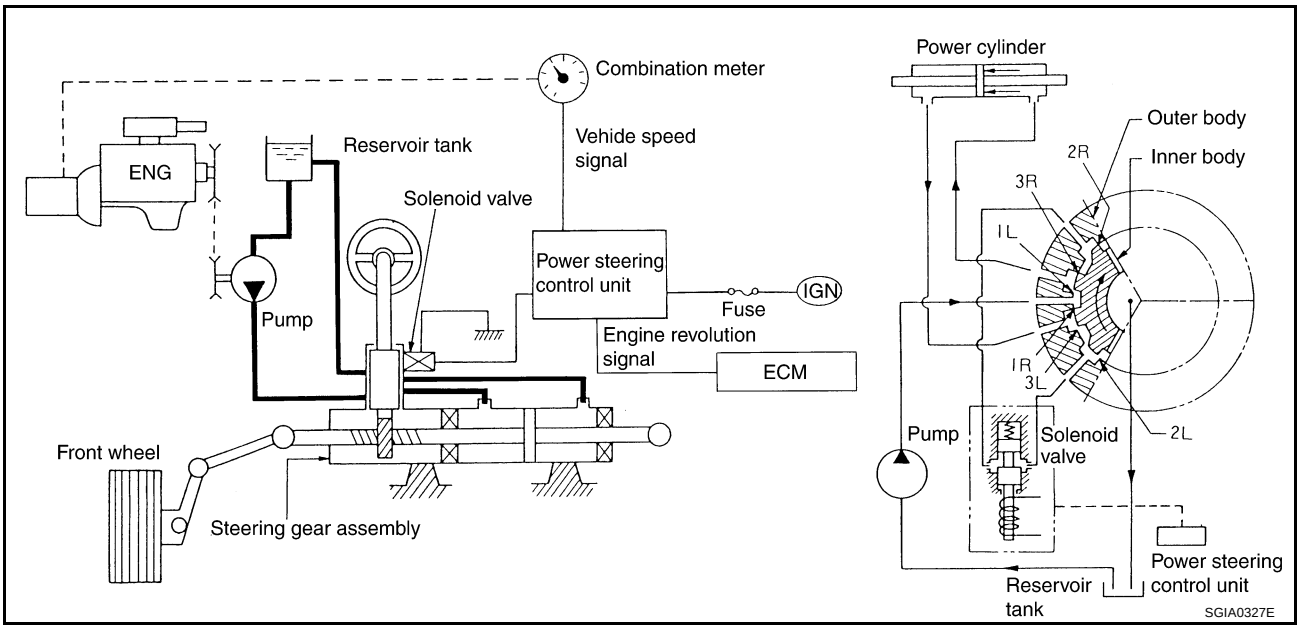

Component Parts Location

AGS0003G

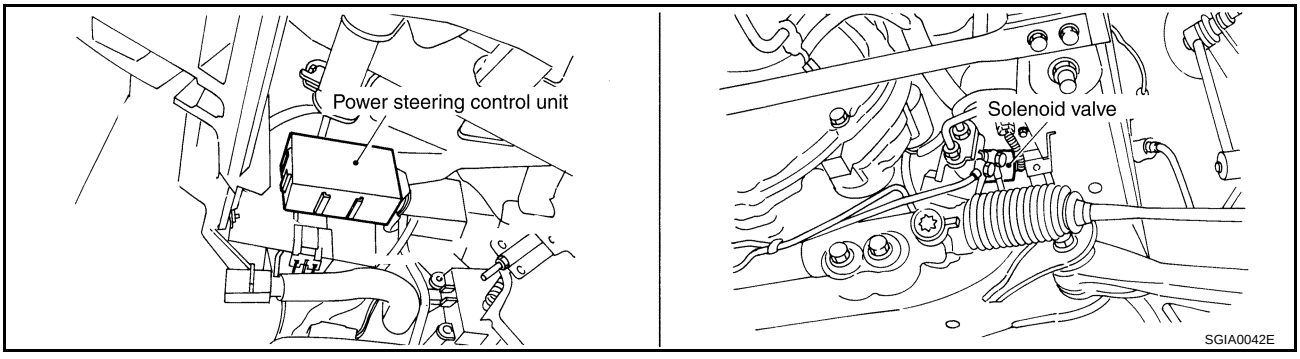

Wiring Diagram

AGS0009N

STC-EPS-01

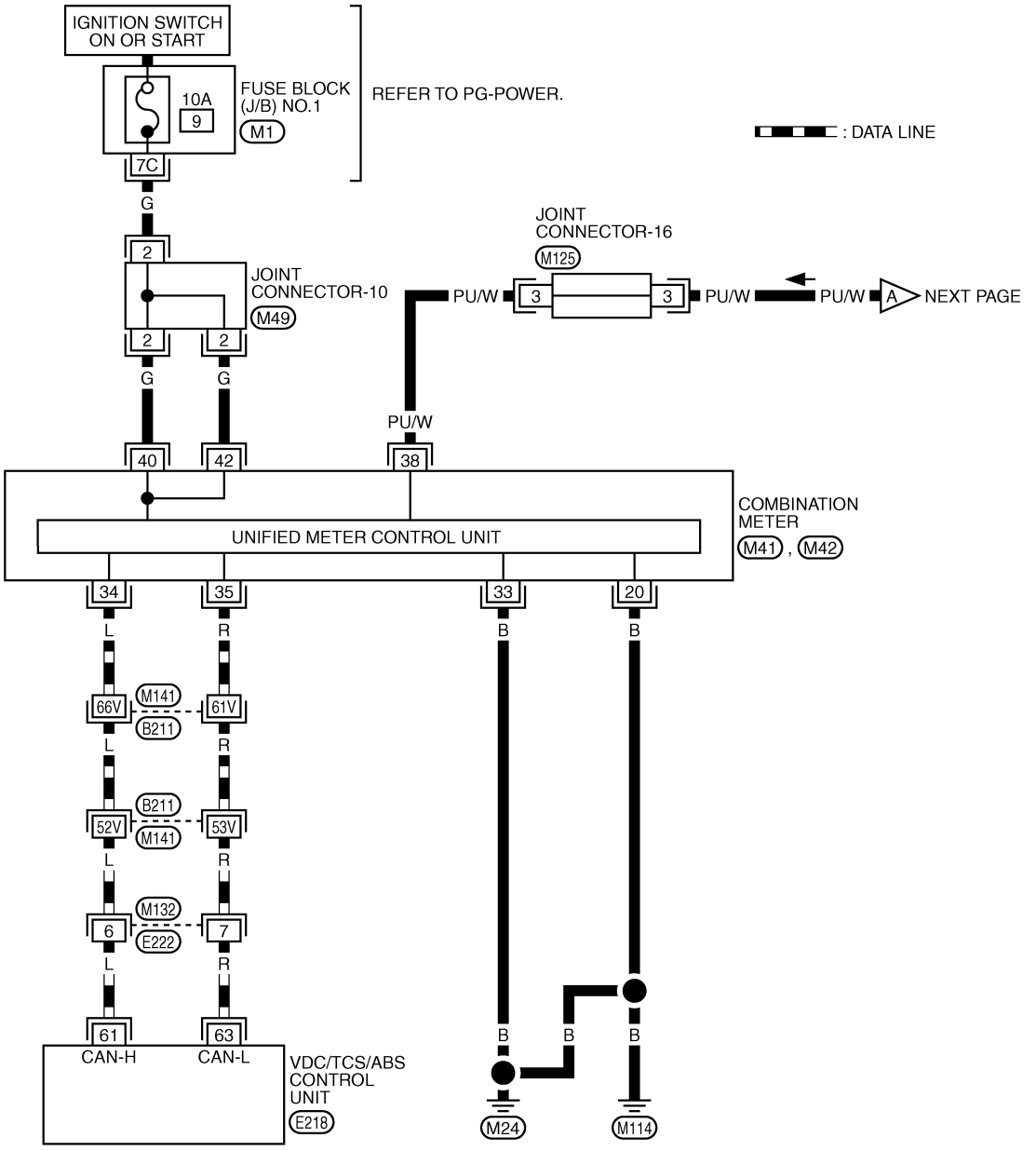

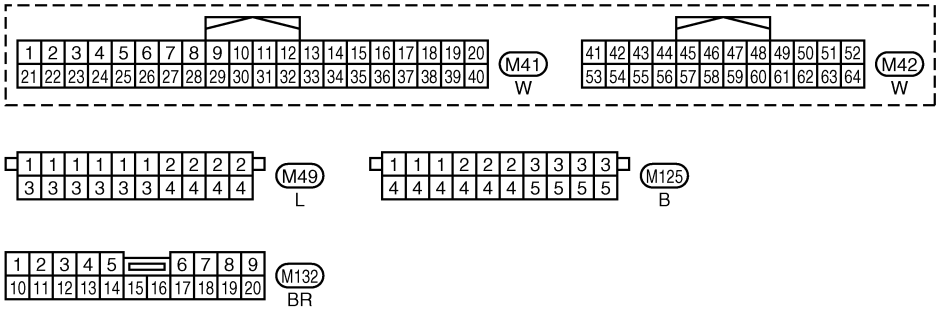

REFER TO THE FOLLOWING.

B211 -SUPER MULTIPLE JUNCTION (SMJ)

M1 -FUSE BLOCK-JUNCTION BOX (J/B) NO.1

E218 -ELECTRICAL UNITS

TGWA0008E

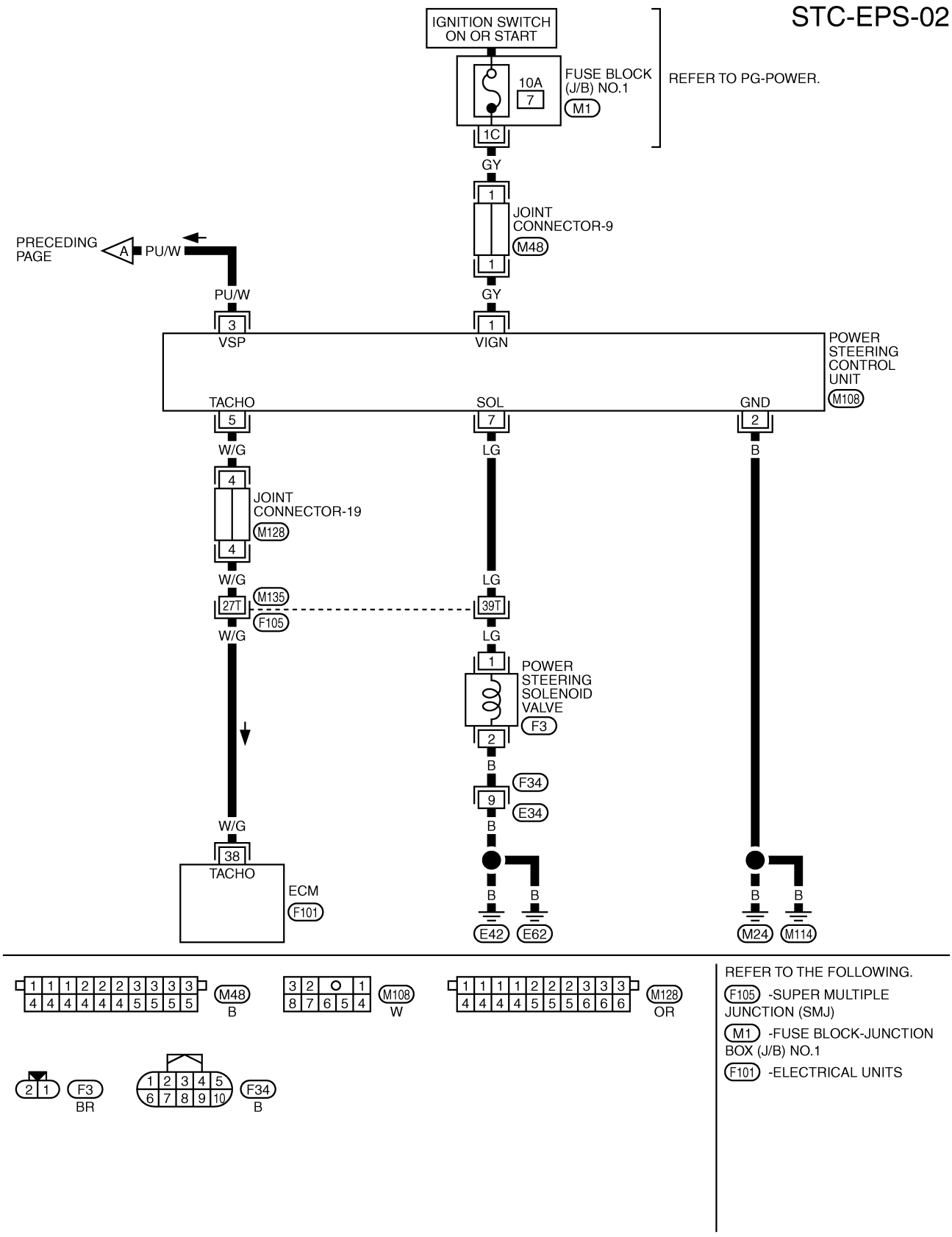
STC-EPS-02
IGNITION SWITCH ON OR START
10A
7
FUSE BLOCK (J/B) NO.1
M1
REFER TO PG-POWER.
1C
GY
1
JOINT CONNECTOR-9
M48
1
GY
PRECEDING PAGE
A
PU/W
PU/W
3
VSP
1
VIGN
POWER STEERING CONTROL UNIT
M108
TACHO
SOL
GND
5
7
2
W/G
LG
B
4
JOINT CONNECTOR-19
M128
4
W/G
LG
27T
M135
F105
39T
W/G
LG
1
POWER STEERING SOLENOID VALVE
F3
2
B
F34
9
E34
B
W/G
38
TACHO
ECM
F101
B
B
E42
E62
B
B
M24
M114
M48
B
M108
W
M128
OR
F3
BR
F34
B
REFER TO THE FOLLOWING.
F105 -SUPER MULTIPLE JUNCTION (SMJ)
M1 -FUSE BLOCK-JUNCTION BOX (J/B) NO.1
F101 -ELECTRICAL UNITS
TGWA0009E

Control Unit Input/Output Signal Standard

AGS0003I

The standard values (voltage), measured with an analog tester in contact with control unit terminal, are shown below:

Measuring terminal +	Measuring terminal –	Measuring point	Standard value	
1	Ground	Ignition switch ON or START	Ignition switch ON	Battery voltage (approx. 12V)
2		Ground	—	0V
3		Vehicle speed signal	When the speed is very low, the voltage fluctuates between approximately 0V and approximately 5V or higher.	When vehicle speed is approx. 40 km/h (25 MPH) 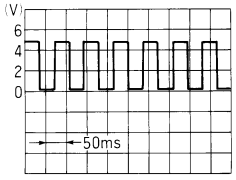 ELF1080D
5		Engine revolution signal	Engine is running ● Warm-up condition ● Engine idle speed	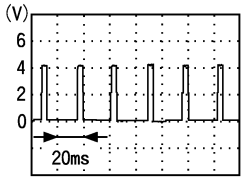 PBIA3654J
			Engine is running ● Warm-up condition ● Engine speed is 2,000 rpm	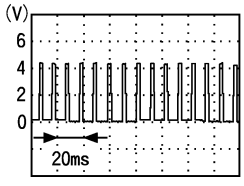 PBIA3655J
7		Solenoid valve	Engine is running	Normal 0 km/h ((0 MPH) : Approx. 4.4 - 6.6V 100 km/h (62 MPH): Approx. 2.4 - 3.6V When the fail-safe function is activated: 0 - 1,500 rpm : Approx. 4.4 - 6.6V 1,500 - 3,000 rpm : Approx. 3.5V 3,000 rpm or more : Approx. 2.1V

Trouble Diagnosis

AGS0003H

PRECAUTIONS FOR DIAGNOSIS

Intermittent incidents may be caused by malfunctioning harness, harness connector or terminal. Move harnesses, harness connectors or terminals by hand to make sure that there is no contact malfunction.
If a circuit tester for measuring voltage is used for check, be careful not to forcibly spread any connector terminals.

INSPECTION BEFORE TROUBLE DIAGNOSIS

- Check power steering fluid level and check for any leak. Refer to PS-6, "POWER STEERING FLUID" .

DIAGNOSIS PROCEDURE

Symptom:

- Heavy steering operation during stationary turns
- Light steering operation during high-speed driving

Inspection procedure

1. CHECK POWER STEERING CONTROL UNIT POWER CIRCUIT

1. Disconnect power steering control unit harness connector.
2. Check voltage between power steering control unit harness connector M108 terminal 1 (GY) and ground.

: Battery voltage should exist.

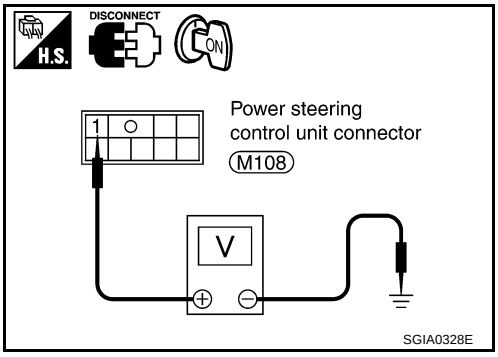

OK or NG

OK >> GO TO 2.
NG >> Check the following.
- 10A fuse [No.7, located in fuse block (J/B) No.1]
- Harness for open or short between power steering control unit and fuse.
- If there is any non-standard condition, repair or replace it.

2. CHECK POWER STEERING CONTROL UNIT GROUND CIRCUIT

Check continuity between power steering control unit harness connector M108 terminal 2 (B) and ground.

2 (B) - Ground : Continuity should exist.

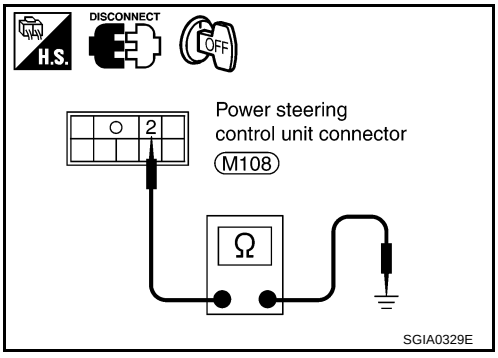

OK or NG

OK >> GO TO 3.
NG >> Repair or replace power steering control unit ground harness.

3. CHECK SOLENOID VALVE SIGNAL 1

1. Connect power steering control unit harness connector.
2. Start engine and gradually increase the vehicle speed from 0 to 100 km/h (0 to 62 MPH).
3. Check voltage between power steering control unit harness connector M108 terminal 7 (LG) and ground.

: Make sure that voltage changes from approximately 5.5V to approximately 2.5V.

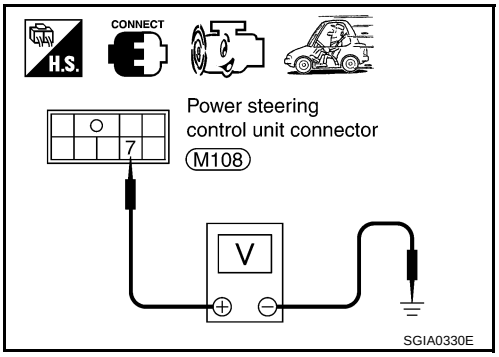

OK or NG

OK >> GO TO 4.
NG >> GO TO 9.

4. CHECK SOLENOID VALVE SIGNAL 2

1. When engine is running at idle, change the engine speed to approximately 1,600 rpm and then to approximately 3,000 rpm.
2. Check voltage between power steering control unit harness connector M108 terminal 7 (LG) and ground.

: Make that voltage changes from approximately 5.5V to approximately 2.1V in steps.

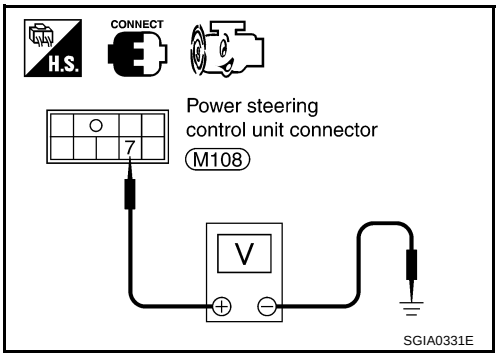

OK or NG

OK >> GO TO 5.
NG >> GO TO 10.

5. CHECK SOLENOID VALVE

- Disconnect power steering control unit and solenoid valve connectors.
- Check continuity between power steering control unit harness connector M108 terminal 7 (LG) and solenoid valve harness connector F3 terminal 1 (LG).

7 (LG) – 1 (LG) : Continuity should exist.

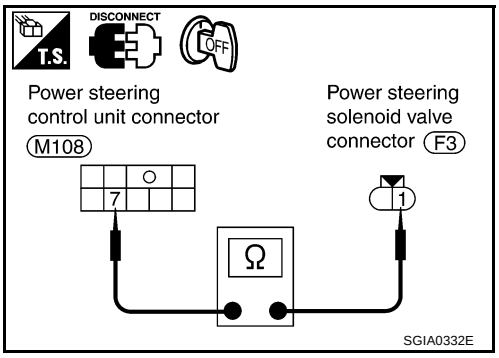

OK or NG

OK >> GO TO 6.
NG >> Check harness for open or short between power steering control unit and solenoid valve.

6. CHECK SOLENOID VALVE HARNESS

- Check continuity between solenoid valve harness connector F3 terminal 2 (B) and ground.

2 (B) – Ground : Continuity should exist.

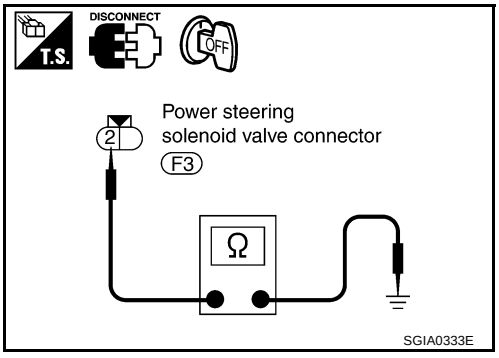

OK or NG

OK >> GO TO 7.
NG >> Repair or replace solenoid valve ground harness.

7. CHECK SOLENOID VALVE

1. Check solenoid valve by listening for its operation sound while applying battery voltage to terminals 1 (LG) and 2 (B).
2. Check resistance value between following solenoid valve terminals.

1 (LG) - 2 (B) : Approx. 4 - 6Ω

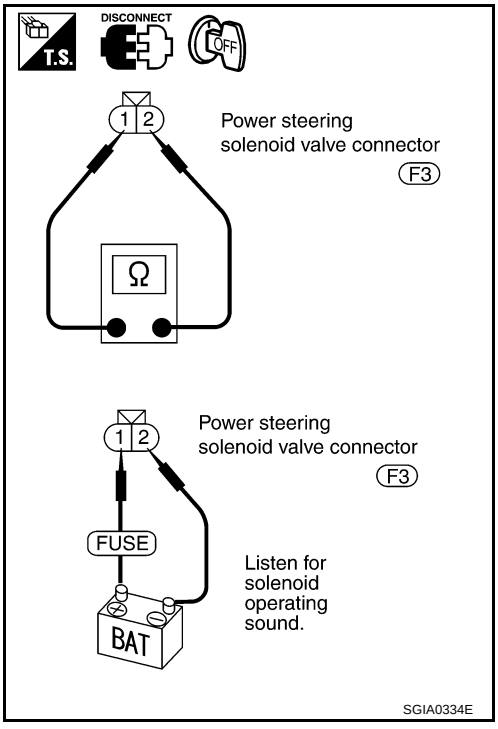

OK or NG

OK >> GO TO 8.
NG >> Replace solenoid valve.

8. CHECK STEERING WHEEL TURNING FORCE

1. Connect power steering control unit harness connector.
2. Check steering wheel turning force. Refer to PS-7, "CHECKING STEERING WHEEL TURNING TORQUE"

OK or NG

OK >> Inspection END.
NG >> Adjust steering gear assembly adjusting screw (PS-13) and check pump discharge pressure (PS-25).

9. CHECK VEHICLE SPEED SIGNAL INPUT

- With rear wheels raised, rotate them by hand.
- Check voltage between power steering control unit harness connector M108 terminals 3 (PU/W) and ground.

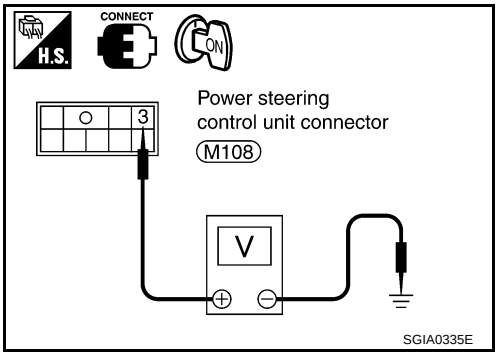

When the wheels are rotated slowly by hand:	
3 (PU/W) – Ground	**: Reading fluctuates between 0V and 5V.** 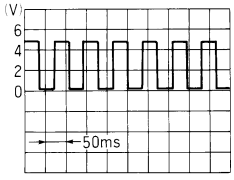 ELF1080D

OK or NG

OK >> Replace power steering control unit.
NG >> Check the following.

- Harness for open or short between power steering control unit and combination meter.
- Combination meter operation. Refer to DI-16, "Vehicle Speed Signal Inspection" .
- If there is non-standard condition, repair or replace it.

10. CHECK ENGINE REVOLUTION SIGNAL

1. When engine is running at idle, change the engine speed to approximately 2,000 rpm.
2. Check voltage between power steering control unit harness connector M108 terminal 5 (W/G) and ground.

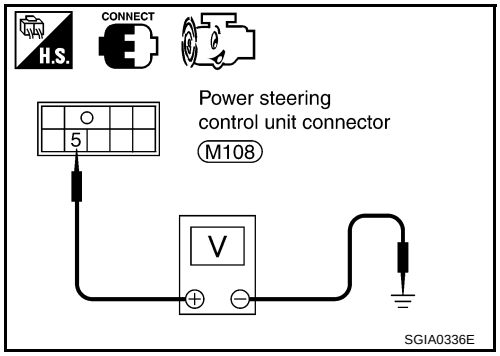

5 (W/G) – Ground	**Engine is running** ● **Warm-up condition** ● **Idle speed**	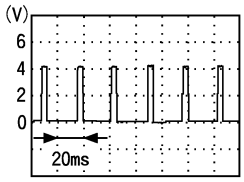 PBIA3654J
	Engine is running ● **Warm-up condition** ● **Engine speed is 2,000 rpm**	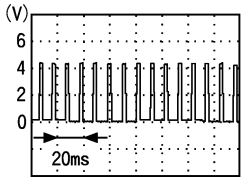 PBIA3655J

OK or NG

OK >> Replace power steering control unit.
NG >> Check the following.

- Harness for open or short between power steering control unit and ECM
- ECM engine revolution signal inspection. Refer to EC-112, "SELF-DIAG RESULTS MODE" .
- If there is any non-standard condition, repair or replace it.

TILT & TELESCOPIC SYSTEM

PFP:48805

System Description

AGS000EY

OPERATION

Steering wheel position can be adjusted with the steering position switch.

NOTE:

- The steering wheel position can be manually operated with the ignition switch OFF.

Component Parts and Harness Connector Location

AGS000EZ

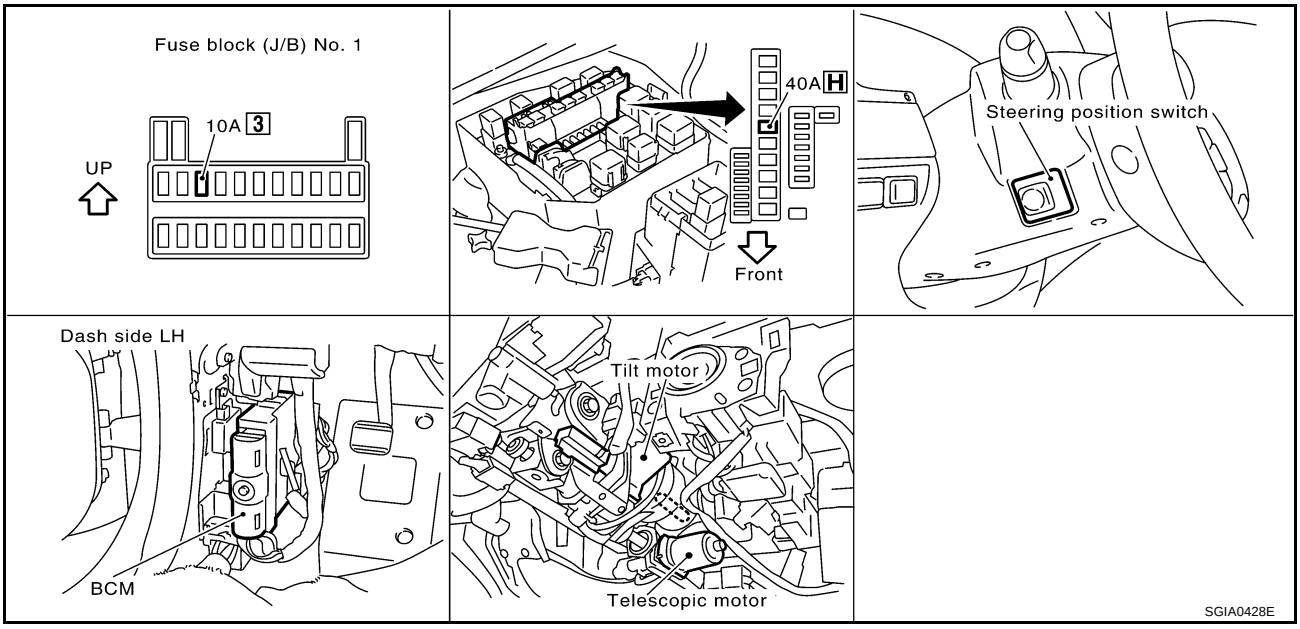

Wiring Diagram

AGS000F0

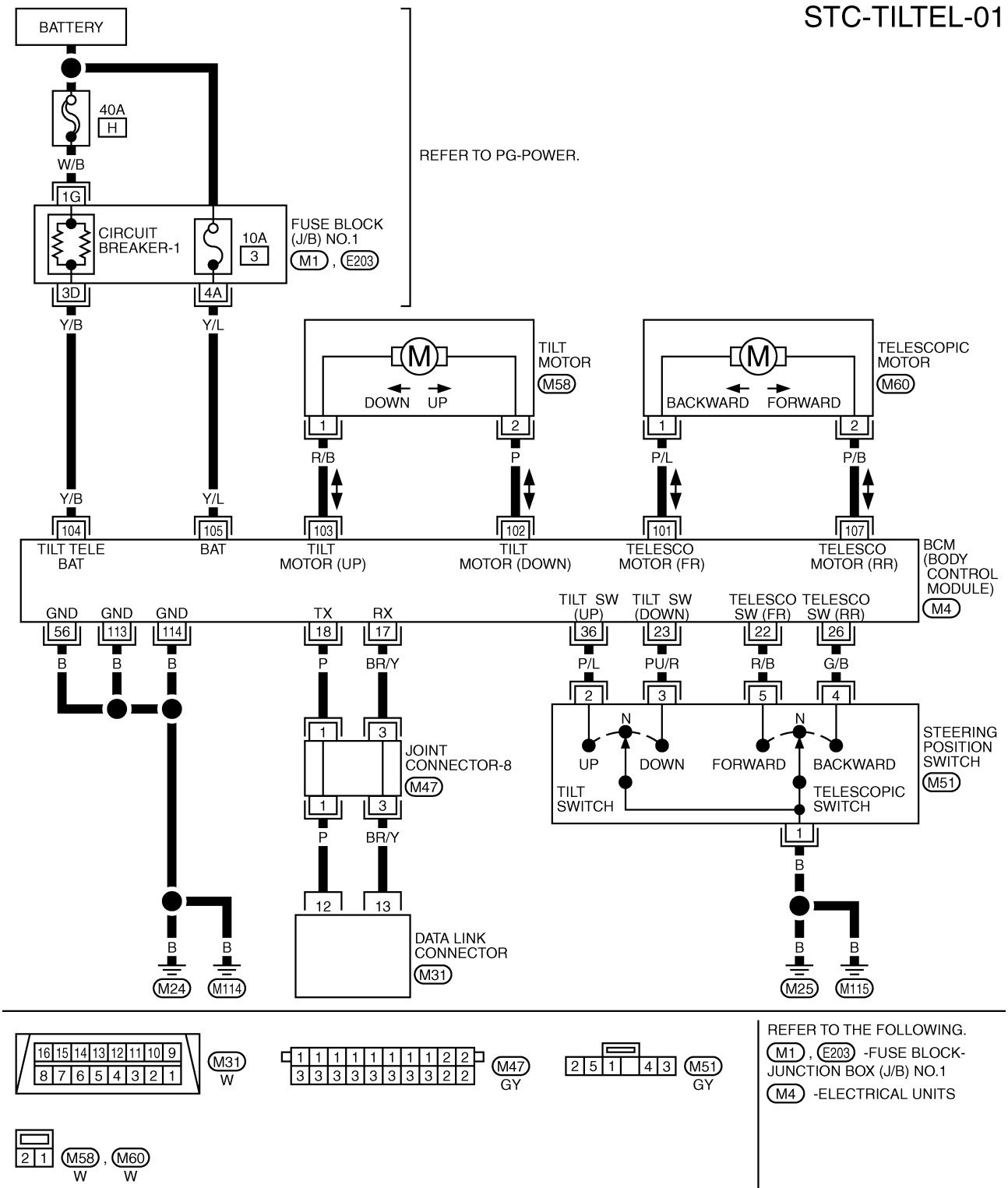

BCM Input/Output Signal Standard

AGS000F1

Terminal	Wire color	Measuring point	Standard value		
17	BR/Y	Data link (RX line)	—		—
18	P	Data link (TX line)	—		—
22	R/B	Telescopic switch FR signal	Telescopic switch	Forward operation (Motor operated)	Approx. 0V
				OFF	Approx. 5V
23	PU/R	Tilt switch DOWN signal	Tilt switch	DOWN operation (Motor operated)	Approx. 0V
				OFF	Approx. 5V
26	G/B	Telescopic switch RR signal	Telescopic switch	Backward operation (Motor operated)	Approx.0V
				OFF	Approx. 5V
36	P/L	Tilt switch UP signal	Tilt switch	UP operation (Motor operated)	Approx. 0V
				OFF	Approx. 5V
56	B	Ground	Ignition switch ON		Approx. 0V
101	P/L	Telescopic motor FR signal	Telescopic switch forward operation.		Battery voltage (Approx. 12V)
102	P	Tilt motor DOWN signal	Tilt switch DOWN operation		Battery voltage (Approx. 12V)
103	R/B	Tilt motor UP signal	Tilt switch UP operation		Battery voltage (Approx. 12V)
104	Y/B	Power supply for tilt and telescopic device	Ignition switch OFF		Battery voltage (Approx. 12V)
105	Y/L	BAT power supply	Ignition switch OFF		Battery voltage (Approx. 12V)
107	P/B	Telescopic motor RR signal	Telescopic switch backward operation		Battery voltage (Approx. 12V)
113	B	Ground	Ignition switch ON		Approx. 0V
114	B	Ground for tilt and telescopic device	Ignition switch ON		Approx. 0V

Preliminary Check

AGS000F2

POWER SUPPLY AND GROUND CIRCUIT INSPECTION

1. CHECK FUSE

- Check if any of the following fuses in the BCM are blown.

Unit	Terminal No.	Power source	Fuse No.
BCM	105	Power source	#3

OK or NG?

OK >> GO TO 2.
NG >> If fuse is blown, be sure to eliminate cause of malfunction before installing new fuse. Refer to PG-2, "POWER SUPPLY ROUTING" .

2. CHECK POWER SUPPLY CIRCUIT (BCM)

1. Disconnect BCM connector.
2. Turn ignition switch ON.
3. Check voltage between BCM harness connector M4 terminal 104 (Y/B), 105 (Y/L) and ground.

Terminals			Power source	Condition	Voltage (V)
(+)		(–)			
Connector	Terminal				
M4	104 (Y/B), 105 (Y/L)	Ground	BAT power supply	Ignition switch OFF	Battery voltage

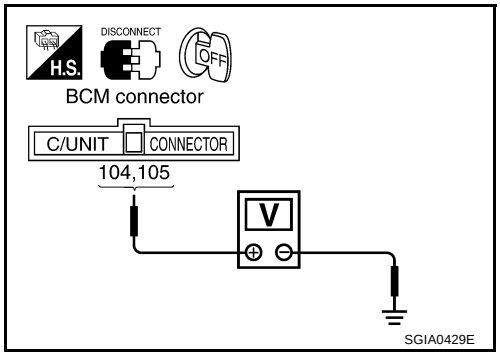

OK or NG?

OK >> GO TO 3.
NG >> Repair or replace harness. Check harness for open or short between BCM and fuse.

3. CHECK GROUND CIRCUIT (BCM)

1. Turn ignition switch OFF.
2. Check continuity between BCM harness connector M4 terminal 56 (B), 113 (B), 114 (B) and ground.

Terminals			Condition	Continuity
(+)		(–)		
Connector	Terminal			
M4	56 (B)	Ground	Ignition switch OFF	Yes
	113 (B)	Ground	Ignition switch OFF	Yes
	114 (B)	Ground	Ignition switch OFF	Yes

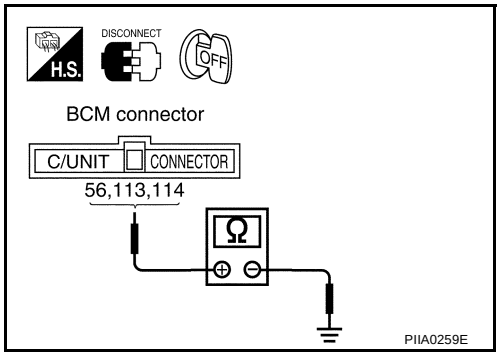

OK or NG?

OK >> Preliminary check is OK.
NG >> Repair or replace BCM ground harness.

Symptom 1: Telescopic System Does Not Operate

AGS000F3

1. CHECK STEERING WHEEL TELESCOPIC MECHANISM

Check the following.

- Operation malfunction caused by steering wheel telescopic mechanism deformation or pinched harness or other foreign materials.
- Operation malfunction and interference with other parts by poor installation.

OK or NG

OK >> GO TO 2.
NG >> Repair the malfunctioning part and check again.

2. CHECK TELESCOPIC SWITCH INPUT/OUTPUT

1. Disconnect steering position switch connector.
2. Check voltage between steering position switch harness connector M51 terminals 4 (G/B), 5 (R/B) and ground.

Terminals			Voltage (V)
(+)		(–)	
Connector	Terminal		
M51	4 (G/B)	Ground	Approx. 5V
	5 (R/B)	Ground	Approx. 5V

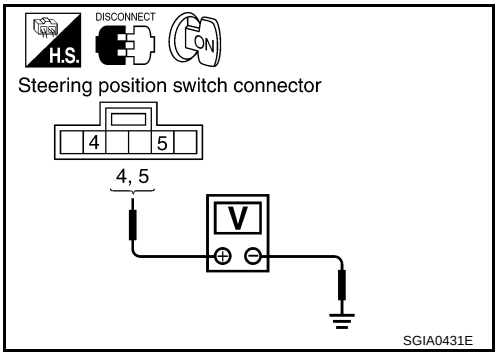

OK or NG

OK >> GO TO 3.
NG >> GO TO 5.

3. CHECK STEERING POSITION SWITCH GROUND CIRCUIT

Check continuity between steering position switch harness connector M51 terminal 1 (B) and ground.

1 (B) – Ground : Continuity should exist.

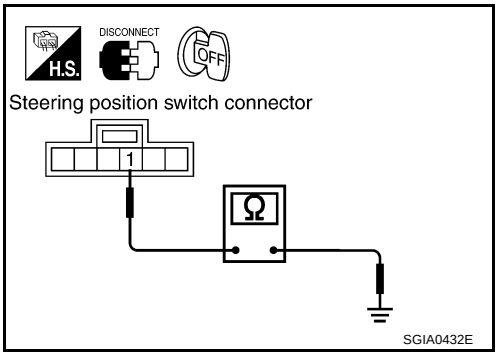

OK or NG

OK >> GO TO 4.
NG >> Replace or replace harness.

4. CHECK TELESCOPIC SWITCH

Check continuity between steering position switch connector terminals 4, 5 and 1.

Terminals	Steering position switch operation	Continuity
4 – 1	Backward position	Yes
	Neutral or forward position	No
5 – 1	Forward position	Yes
	Neutral or backward position	No

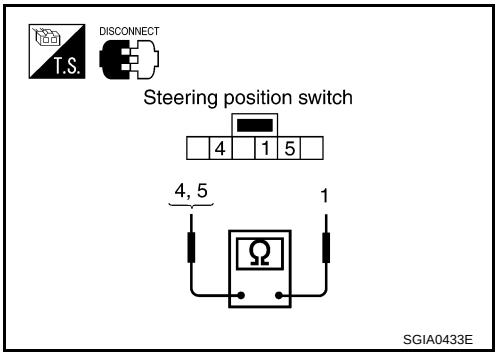

OK or NG

OK >> GO TO 6.
NG >> Replace steering position switch.

5. CHECK HARNESS CONTINUITY

1. Disconnect BCM connector.
2. Check continuity between BCM harness connector M4 terminals 22 (R/B), 26 (G/B) and steering position switch harness connector M51 terminals 4 (G/B), 5 (R/B).
3. Check continuity between BCM harness connector M4 terminals 22 (R/B), 26 (G/B) and ground.

Terminals				Continuity
(+)		(–)		
Connector	Terminal	Connector	Terminal	
M4	22 (R/B)	M51	5 (R/B)	Yes
	26 (G/B)		4 (G/B)	Yes
	22 (R/B)	Ground		No
	26 (G/B)	Ground		No

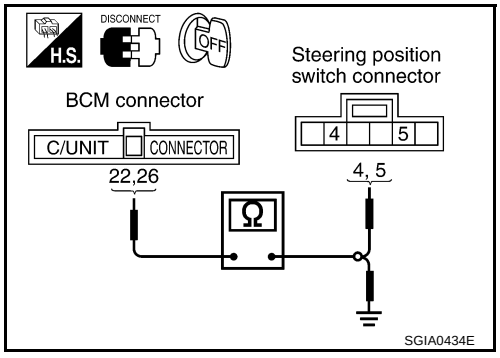

OK or NG?

OK >> Replace BCM.
NG >> Repair or replace harness.

6. CHECK BCM OUTPUT SIGNAL

1. Disconnect telescopic motor connector.
2. Check voltage between telescopic motor harness connector M60 terminals 1 (P/L), 2 (P/B) and ground.

Terminals			Condition	Voltage
(+)		(–)		
Connector	Terminal			
M60	1 (P/L)	Ground	Telescopic switch (FR operation)	Battery voltage
	2 (P/B)	Ground	Telescopic switch (RR operation)	Battery voltage
	1 (P/L), 2 (P/B)	Ground	Telescopic switch OFF	0V

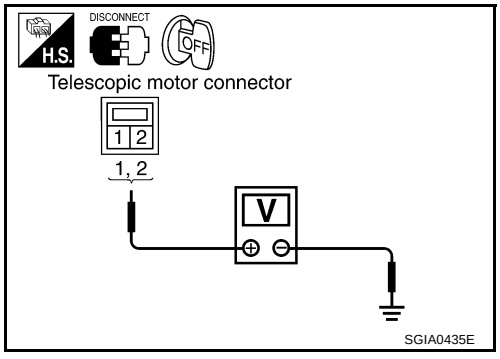

OK or NG

OK >> Replace telescopic motor.
NG >> GO TO 7.

7. CHECK TELESCOPIC MOTOR CIRCUIT

1. Disconnect BCM and telescopic motor connectors.
2. Check continuity between BCM harness connector M4 terminals 101 (P/L), 107 (P/B) and telescopic motor harness connector M60 terminals 1 (P/L), 2 (P/B).
3. Check continuity between BCM harness connector M4 terminals 101 (P/L), 107 (P/B) and ground.

Terminals				Continuity
BCM (+)		Telescopic motor (–)		
Connector	Terminal	Connector	Terminal	
M4	101 (P/L)	M60	1 (P/L)	Yes
	107 (P/B)		2 (P/B)	Yes
	101 (P/L)	Ground		No
	107 (P/B)	Ground		No

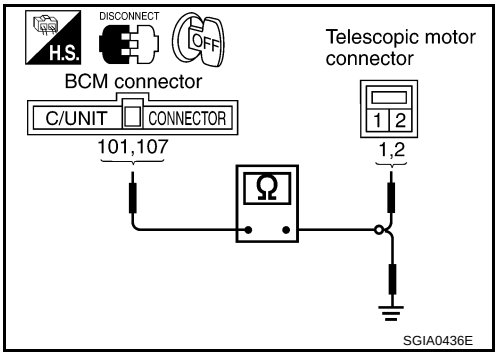

OK or NG

OK >> Replace BCM.
NG >> Repair or replace harness.

Symptom 2: Tilt System Does Not Operate

AGS000F4

1. CHECK STEERING WHEEL TILT MECHANISM

Check the following.

- Operation malfunction caused by steering wheel tilt mechanism deformation or pinched harness or other foreign materials.
- Operation malfunction and interference with other parts by poor installation.

OK or NG

OK >> GO TO 2.
NG >> Repair the malfunctioning part and check again.

2. CHECK TILT SWITCH INPUT/OUTPUT

1. Disconnect steering position switch connector.
2. Turn ignition switch ON.
3. Check voltage between steering position switch harness connector M51 terminals 2 (P/L), 3 (PU/R) and body ground.

Terminals			Voltage (V)
(+)		(–)	
Connector	Terminal		
M4	2 (P/L)	Ground	5V
	3 (PU/R)	Ground	5V

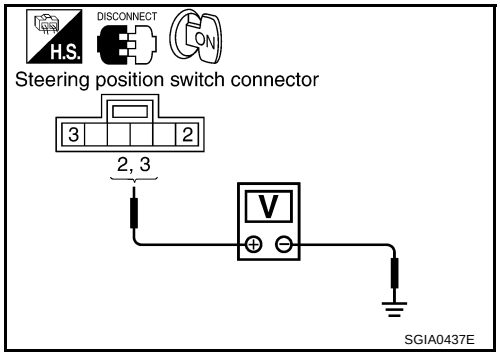

OK or NG

OK >> GO TO 3.
NG >> GO TO 5.

3. CHECK STEERING POSITION SWITCH GROUND CIRCUIT

1. Turn ignition switch OFF.
2. Check continuity between steering position switch harness connector M51 terminal 1 (B) and body ground.

1 (B) – Ground : Continuity should exist.

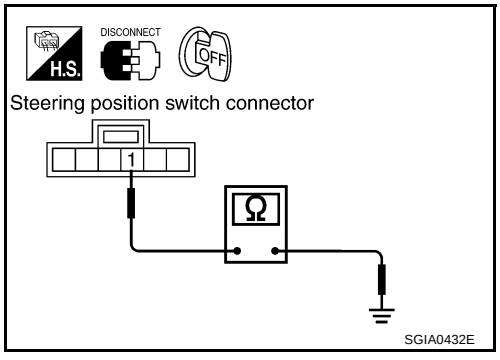

OK or NG

OK >> GO TO 4.
NG >> Repair or replace harness.

4. CHECK TILT SWITCH

Check continuity between steering position switch connector terminals 2, 3 and 1.

Terminals	Steering position switch operation	Continuity
2 – 1	Tilt up position	Yes
	Neutral or tilt down position	No
3 – 1	Tilt down position	Yes
	Neutral or tilt up position	No

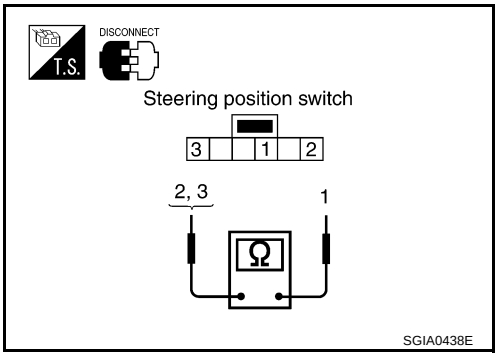

OK or NG

OK >> GO TO 6.
NG >> Replace steering position switch.

5. CHECK HARNESS CONTINUITY

1. Disconnect BCM connector.
2. Check continuity between BCM harness connector M4 terminals 23 (PU/R), 36 (P/L) and steering position switch harness connector M51 terminals 2 (P/L), 3 (PU/R).
3. Check continuity between BCM harness connector M4 terminals 23 (PU/R), 36 (P/L) and ground.

Terminals				Continuity
(+)		(–)		
Connector	Terminal	Connector	Terminal	
M4	23 (PU/R)	M51	3 (PU/R)	Yes
	36 (P/L)		2 (P/L)	Yes
	23 (PU/R)	Ground		No
	36 (P/L)	Ground		No

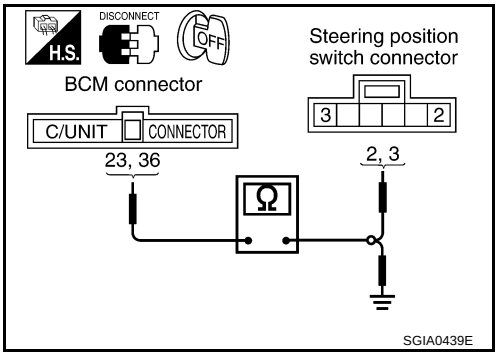

OK or NG

OK >> Replace BCM.
NG >> Repair or replace harness.

6. CHECK BCM OUTPUT SIGNAL

1. Disconnect tilt motor connector.
2. Check voltage between tilt motor harness connector M58 terminals 1 (R/B), 2 (P) and ground.

Terminals			Condition	Voltage
(+)		(–)		
Connector	Terminal			
M58	1 (R/B)	Ground	Tilt switch (UP operation)	Battery voltage
	2 (P)	Ground	Tilt switch (DOWN operation)	Battery voltage
	1 (R/B), 2 (P)	Ground	Tilt switch OFF	0V

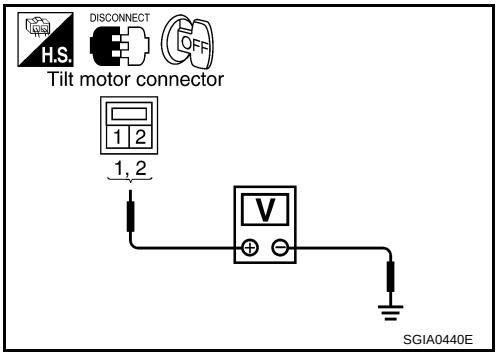

OK or NG

OK >> Replace tilt motor.
NG >> GO TO 7.

7. CHECK TILT MOTOR CIRCUIT

1. Disconnect BCM and telescopic motor connectors.
2. Check continuity between BCM harness connector M4 terminals 102 (P), 103 (R/B) and tilt motor harness connector M58 terminals 1 (R/B), 2 (P).
3. Check continuity between BCM harness connector M4 terminals 102 (P), 103 (R/B) and body ground.

Terminals				Continuity
BCM (+)		Tilt motor (–)		
Connector	Terminal	Connector	Terminal	
M4	102 (P)	M58	2 (P)	Yes
	103 (R/B)		1 (R/B)	Yes
	102 (P)	Ground		No
	103 (R/B)	Ground		No

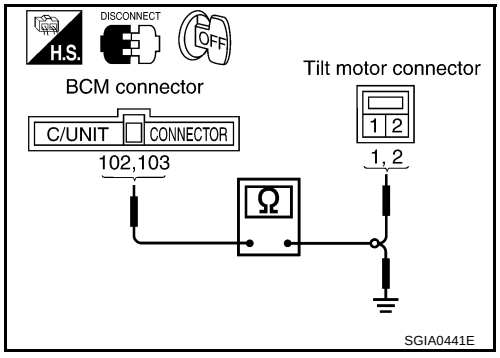

OK or NG

OK >> Replace BCM.
NG >> Repair or replace harness.